Atmospheric Discharge Safety Relief Valves

for compressed air or gases

Seetru Limited

Type 31210

Safety valves made from Brass <
Atmospheric discharge with threaded connections <

Example Applications

- Compressors
- Pressure vessels
- Pneumatic systems
- High pressure systems

Specifications

- Inlet connections: 3/8” to ¾”
- Temperature:-40°C to +200°C (depending on seal material)
- Pressure range: 48.2 to 241.4 bar

Approvals

- Designed in accordance with BS EN ISO-4126-1 &-7
- PED 2014/68/EU (CE)
- PE(S)R UK SI 2016 No. 1105 (UKCA)

Materials of Construction

Component	Material	Grade
Inlet	Stainless Steel	304S15
Body	Brass	BS2874 CZ121
Internal parts	Brass & Stainless Steel	BS2874 CZ121 & 303S32
Spring	Stainless Steel	302

Seal Materials

Seal Material	Temperature Range
Viton® (FKM)	-15°C to +200°C
Nitrile (NBR)	-40°C to +120°C

Easing Gear / Lifting Gear Options

Standard option – No easing gear. Fitted with downward deflecting shroud

Optional – Lever lift easing gear

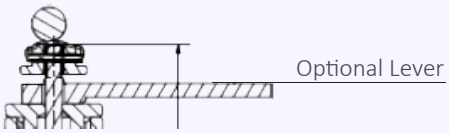

Technical information by bore size

Bore size	3.2mm		
Inlet Size	3/8"	1/2"	3/4"
Flow Area	10.46mm²		
H - Height	94mm		
TÜV alloted outflow coefficient	0.68		
Weight (approximate) Kg	0.5		
Set Pressure range - PED (CE) bar	48.2 to 241.4		
Relieving pressure/fully open pressure	Set pressure +10%		
Reseating pressure	Set pressure-15%		

Valves with Rota-lift Easing Gear

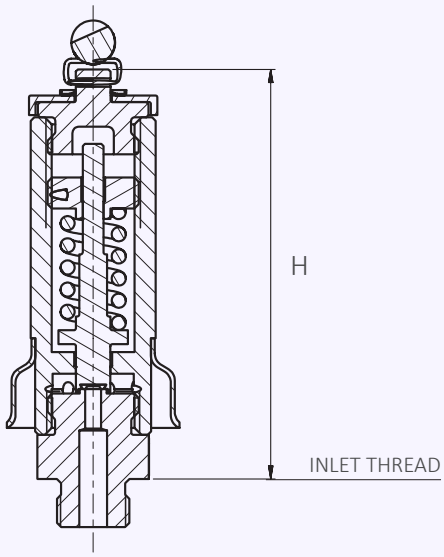

Standard Thread Connection Types

- BSP Parallel male thread (3/8”,1/2” or 3/4”)
- BSP Taper male thread (3/8” or 1/2”)
- NPT male thread (1/2”)

Valve Selection Guide

Approval Required	Valve type	Inlet Size	Thread Type	Easing Gear	Seal Material
PED (CE)	31210	Select inlet size from above table	Select thread type	None	Viton® (FKM)
					Nitrile (NBR)

EAC marking available upon request

***Please send your selected details to Seetru and we can provide the full ordering code, price and lead-time.**

Example of Valve Selection Process

Example Selection	CE	31210	1/2"	BSP parallel	None	Viton	100 bar
	Approval	Valve Type	Inlet Size	Thread Type	Easing Gear	Seal	Set Pressure

Capacity Table - In accordance with TÜV, AIR at 0°C and 1013mbar. Normal m³/hour

Type 31210: Flow rates at 10% above the set pressure

Set Pressure		Bore Size (D0)				
		3.65mm				
bar	psi	Nm³/Hour				
48.2	698.9	261.8				
50.0	725.0	271.5				
60.0	870.0	324.8				
70.0	1015.0	378.1				
80.0	1160.0	431.4				
90.0	1305.0	484.7				
100.0	1450.0	538.0				
150.0	2175.0	804.6				
200.0	2900.0	1071.1				
240.0	3480.0	1284.1				
241.4	3500.3	1292.1				